Apollo-Free

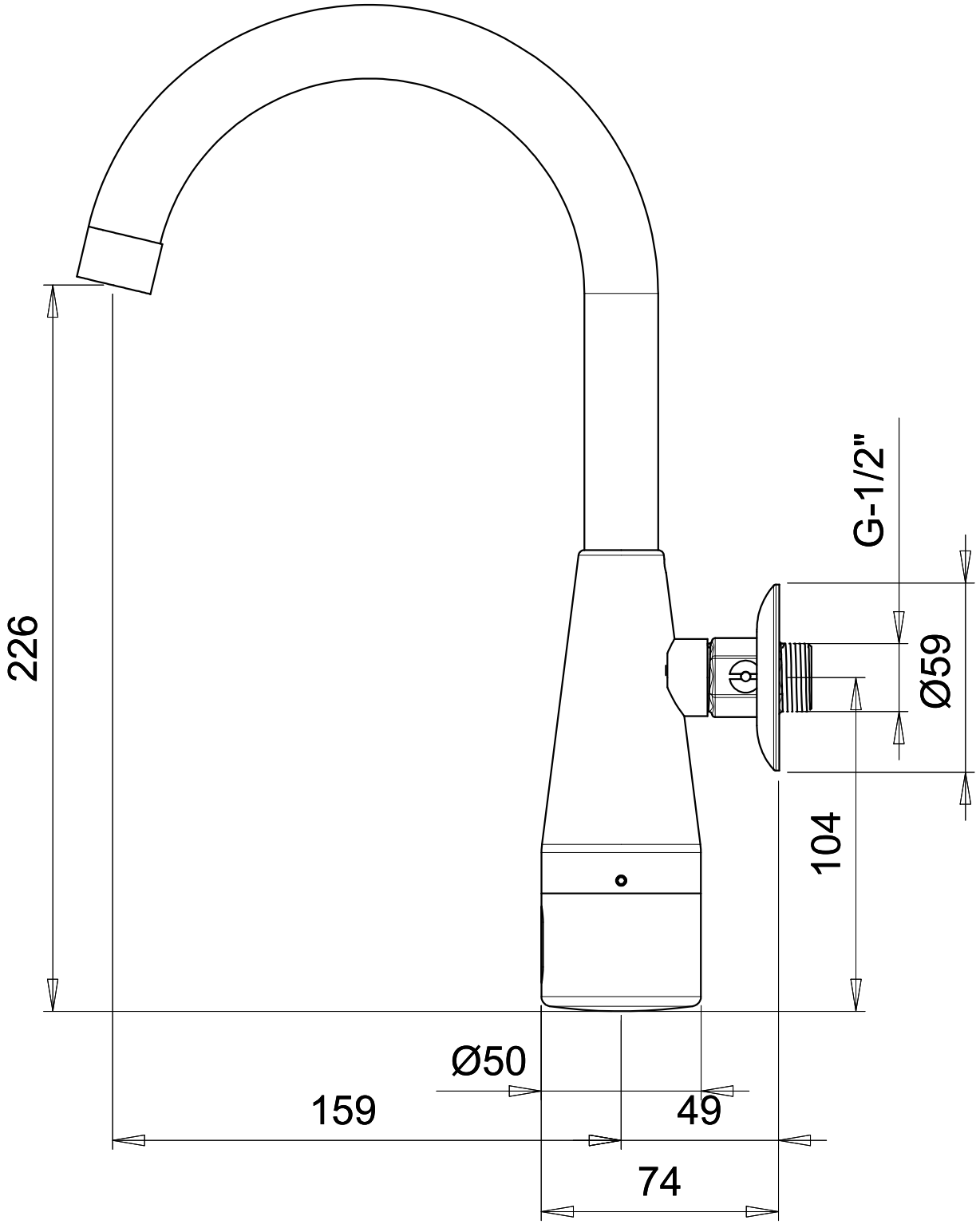

Y.STERN ENGINEERING LTD.