Extreme 1000 Plus B

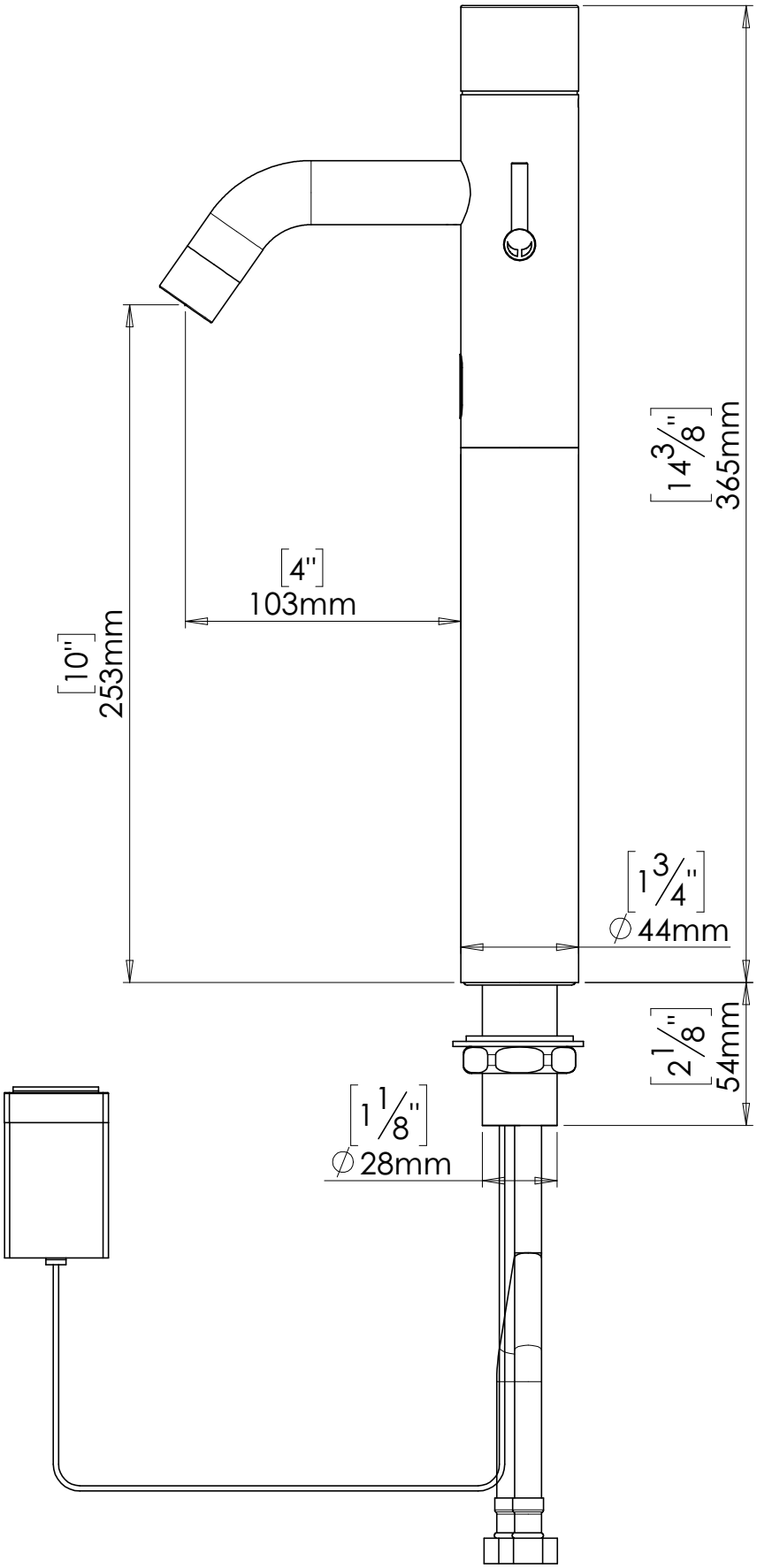

Y.STERN ENGINEERING LTD.