Perfect Time SH 1042T

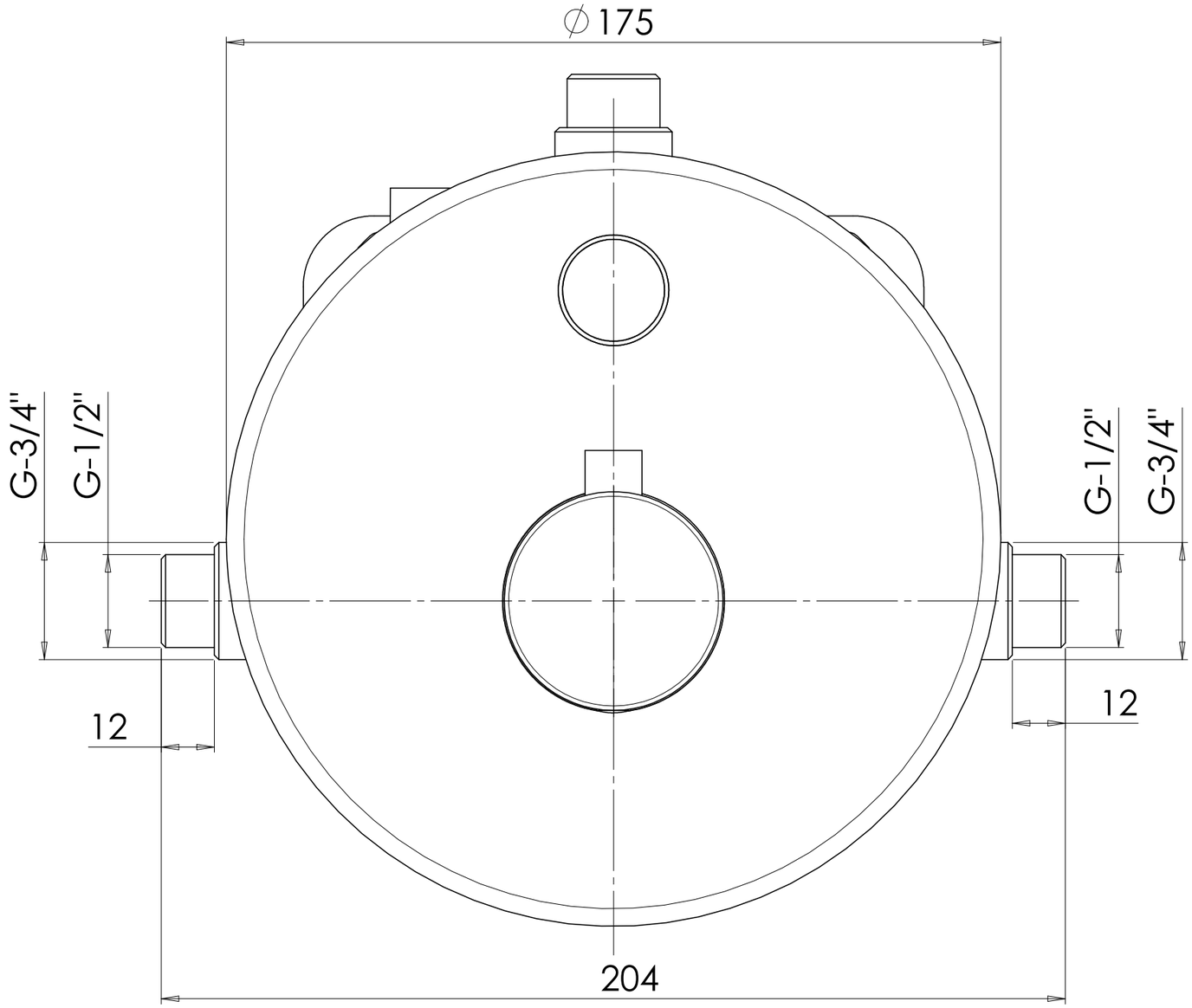

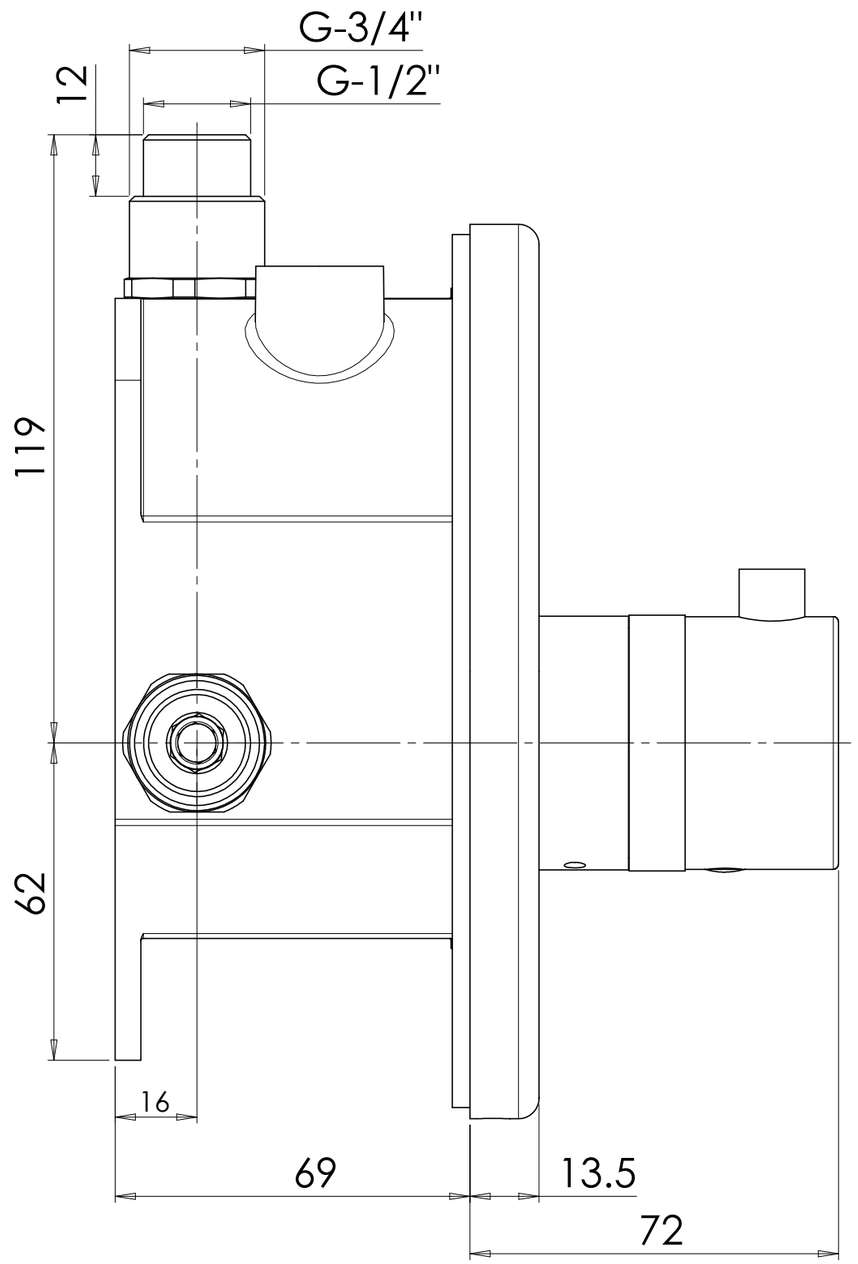

Y.STERN ENGINEERING LTD.