SMART PLUS E

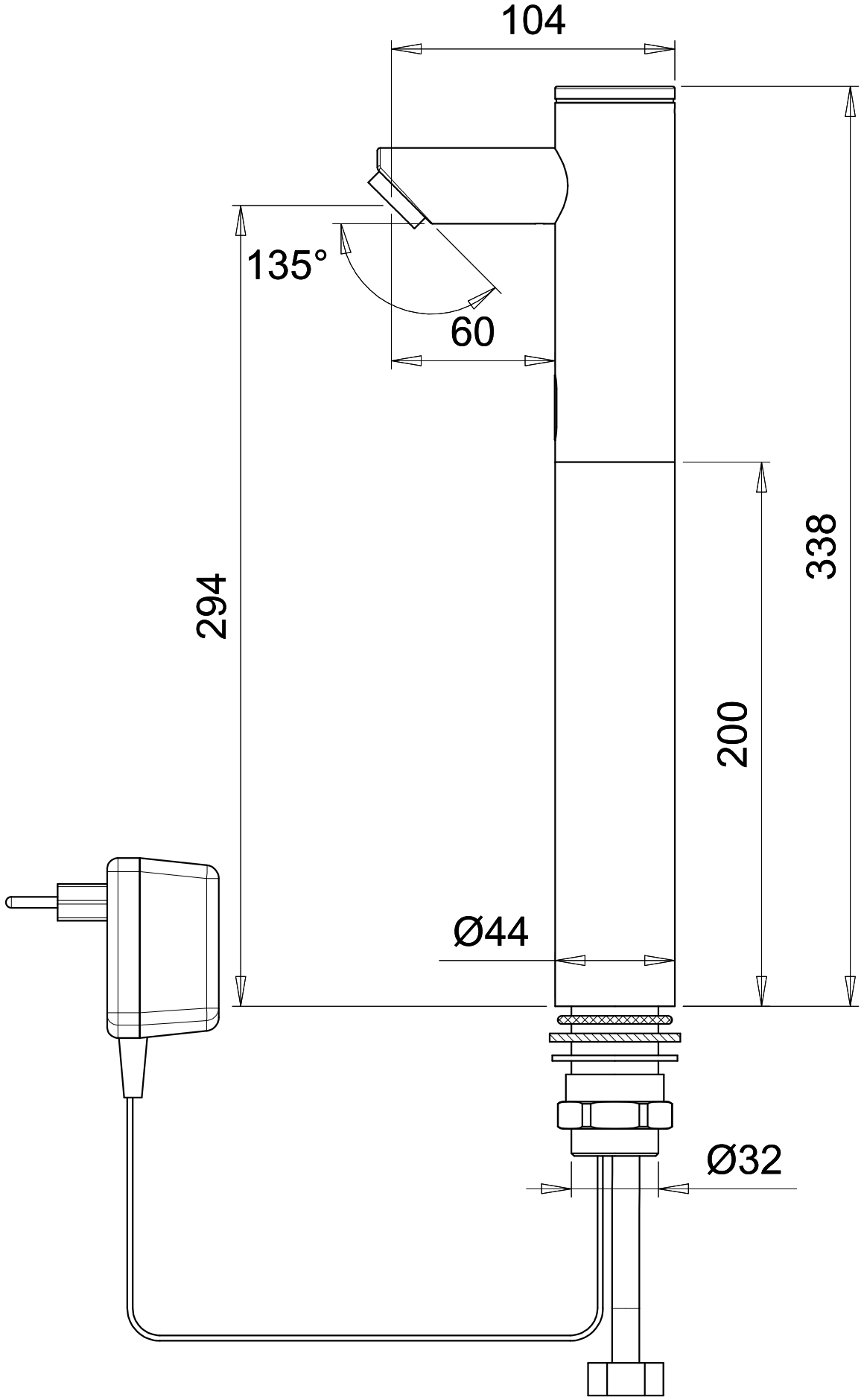

Y.STERN ENGINEERING LTD.